GELATO CART

ELEGANCE SERVED CHILLED

QGASTRO
KOMPLETTA LÖSNINGAR FÖR
MODULER-STORKÖK
KYLA-VENTILATION
070-432 88 88 WWW.QGASTRO.SE

The Ice Cream Cart : a delightful, mobile, and versatile solution for serving treats anywhere, perfect for both indoor and outdoor use. This cart functions as a multi-purpose platform for marketing, sales of delicious ice cream. Whether used as a charming mobile shop, an engaging promotional booth, or a lively street icecream cart, it offers various customization options. With an array of add-ons and accessories, it can be tailored to meet any specific requirements, ensuring your ice cream service is as unique as your flavors.

Ice Cream Cart Features

Fresh and waste water compartment
Interior Storage

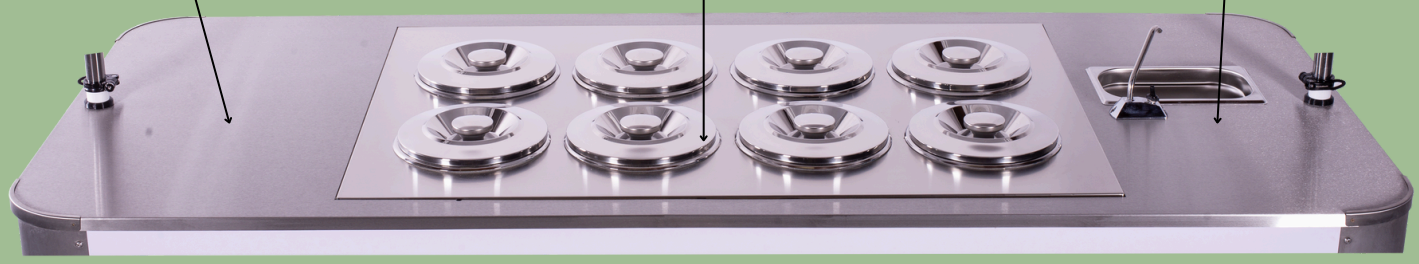
Food Grade Stainless Steel
Italian Pozzeti machine with 8 compartments
Water tap and sink

Cart Specs

Hand-built in our modern EU factory, the Ice Cream Cart is made of highest quality materials using cutting edge manufacturing techniques.

SPECS	DETAILS
Cart Body	• Fully assembled body • Electrostatically painted steel chassis, 12mm plywood walls covered with HPL • Stainless steel parts and powder coated steel parts • 2 doors with industrial locked and keys
Electrical System	• Electric fuse panel with safety switch 16Ah • Double socket 220V or 110V • Electric cable with plug, 3 meters long
Countertop	• Food grade stainless steel, reinforced with plywood with integrated stainless steel sink and water tap
Water system	• Stainless steel sink GN1/4-100 mm • Faucet / Tap with built-in water pump activation button • 12V water pump powered by a 12V-220V power source connected to the fuse panel • 20-liter fresh water container + 20-liter waste water container
Roof	• Foldable roof with generously sized built-in shel
Wheels	• 17 inch motorcycle wheels
Colour	• White or Black
Branding	• Available for an extra fee, with printed decals.
Storage	• 2 interior storage compartments with lockable doors • 1 storage compartment integrated in to the roof.
Net weight	• 300 kg
Packing	• Wooden box: 2050 length x 1050 width x 1800 height - milimeters - Gross weight 360 kg
Warranty	• 12 months (subject to normal wear and tear)

Gelato Machine Specs

SPECS	DETAILS
Ice Cream Machine	Made in Italy by Mondial Framec
Power	350 W - 220v (For EU) or 110v (for USA)
Refrigerant gas	R290
Temperature range	-5 to -20 Celsius degrees
Countertop	Food grade stainless steel
Energy consumtion	350W - 5,9 Kwh/24h
Ice Cream storage	• 112 liters of ice cream, in 16 carapinas of 7 liter each • 8 primary carapinas + 8 backup (stacked beneath) • 7 liters capacity for each carapina
Climate class	4 (30°C-55%RH) G3
Machine Size	1112 lengh x 710 width x 1007 height - milimeters

EXTRA OPTIONS

SPECS	DETAILS
Solar panel system This system ensures the cart operates in two modes: on a 12V battery with an 8-hour autonomy or on-grid at 220V or 110V	• Solar panel - 200W • 12V to 220V switch - easy to switch from 220v to 12v • 220V/110V electrical panel with 16A bipolar circuit breaker, 12V fuse - 200A. • 12V battery charger • Pure sine wave inverter 3000W - 12-220V • Battery holder - battery not included • Double 220V socket, 16A - capacity 3kW
Roof led lights	This system is mounted under the roof and illuminates the countertop surface at night
Bicycle traction system This system allows the addition of a third wheel with a mounting system for both the cart and the bicycle, making the cart easy to tow, effortless, and with its own braking system	• Traction arm with seat post clamp system • 17" motorcycle wheel mounted on a fork with bearing rotation system • Hydraulic disc brake system (the cart will brake independently without putting pressure on the bicycle) breaker, 12V fuse - 200A. • Front cart connection system with screws
Winch for loading the cart into van or trailer Allows the cart to be easily loaded and unloaded into a van or trailer by a single person using a remote control. This system requires an additional 12V-50Ah battery.	• Towing capacity 900kg • Power: 12V

GENERAL DIMENSIONS

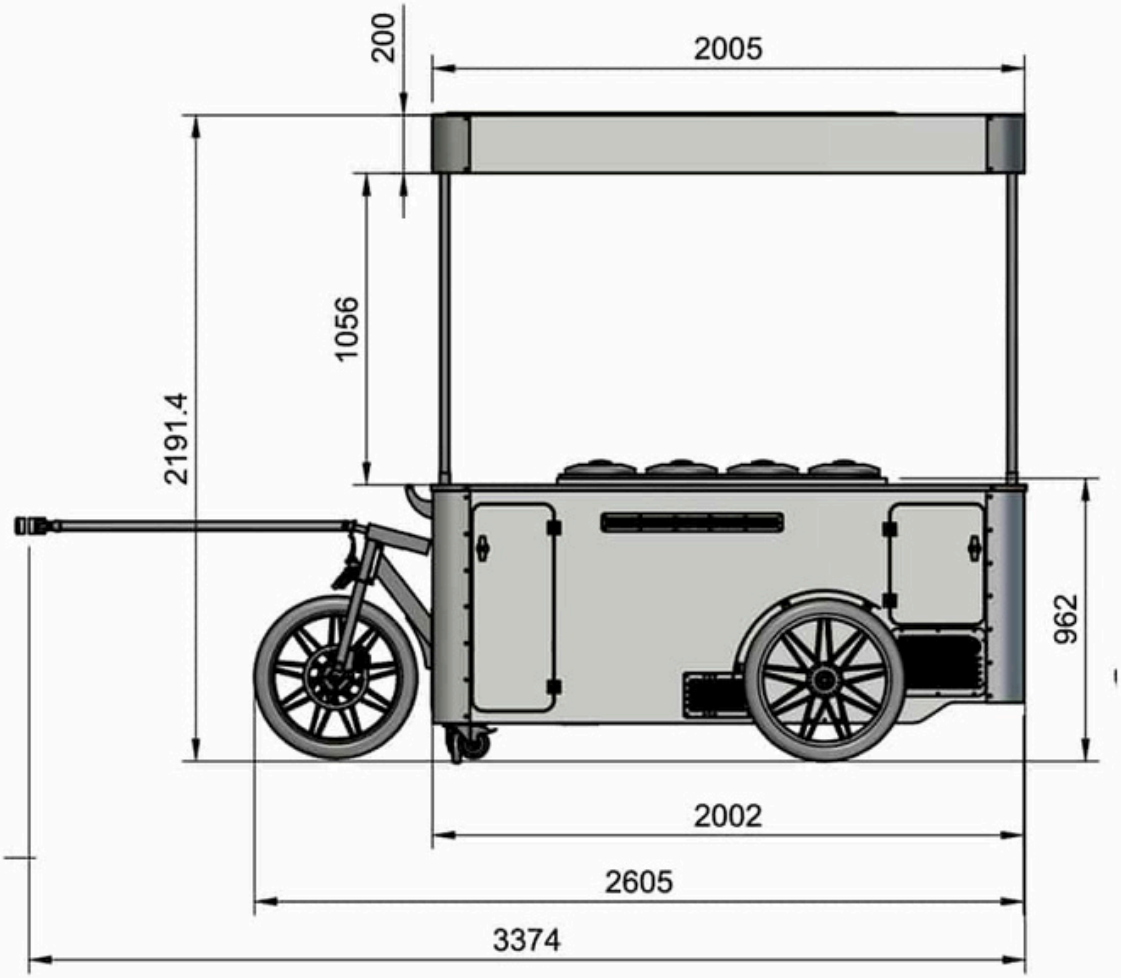

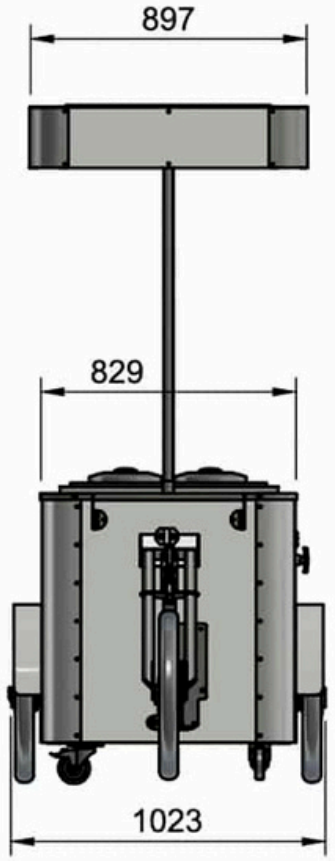

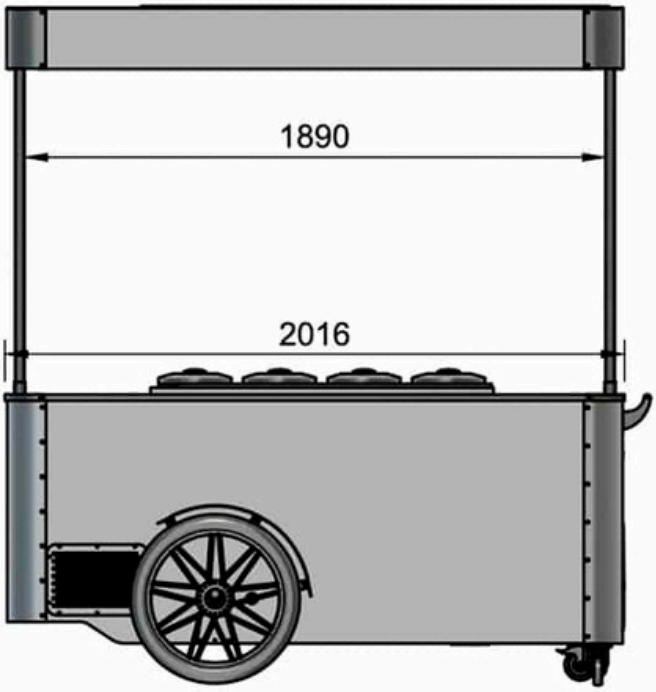
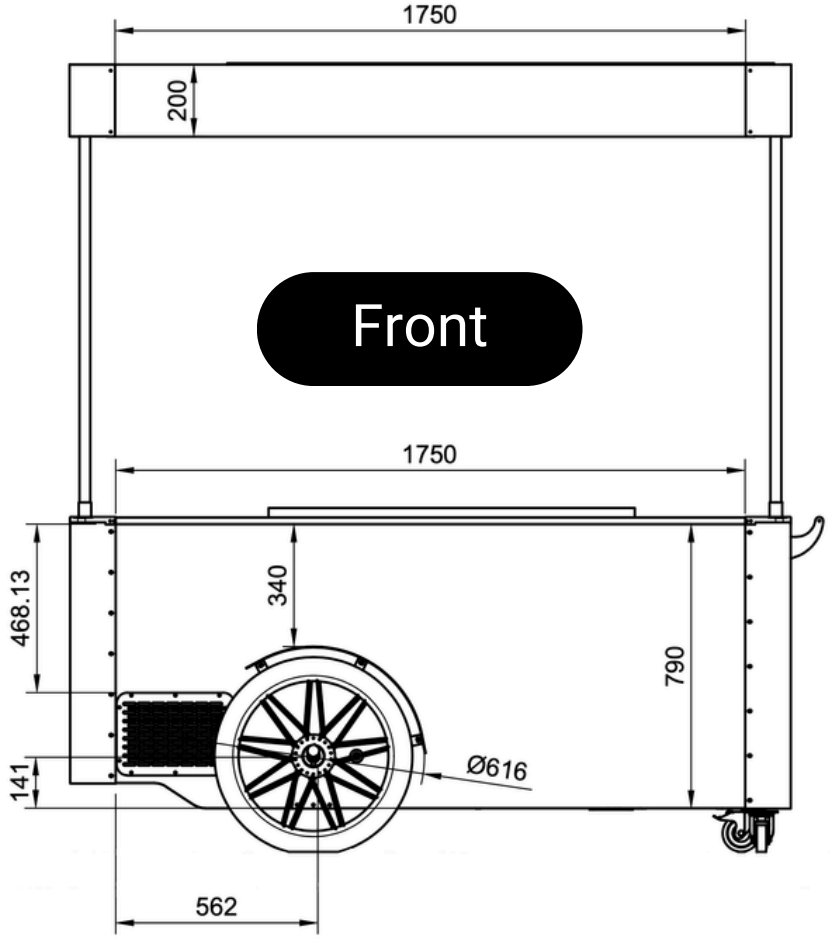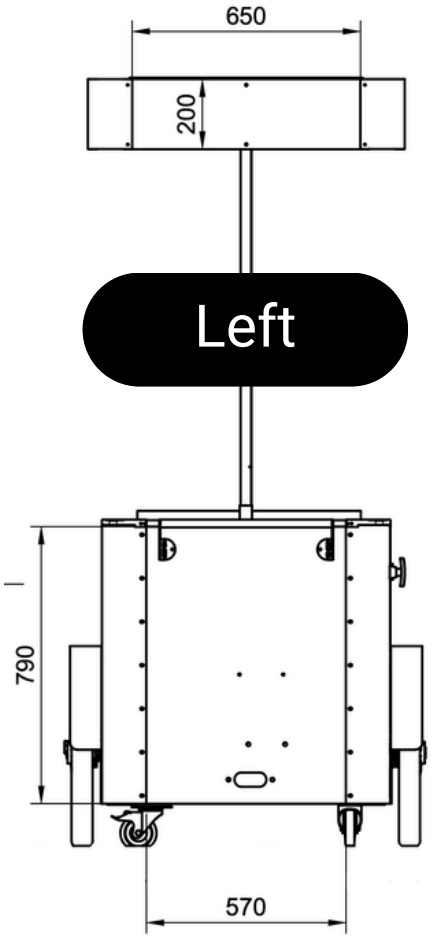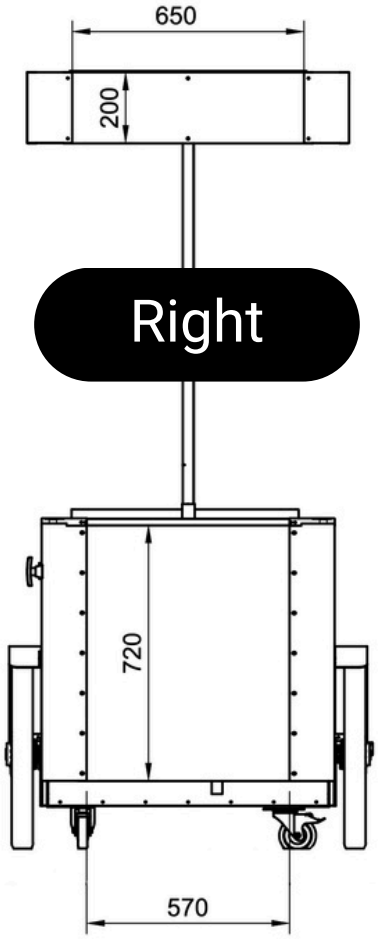
PRINT DIMENSIONS